(No Model.)

6 Sheets—Sheet 1.

S. BROWN.

MACHINE FOR BALLING CORD OR YARN.

No. 389,054.

Patented Sept. 4, 1888.

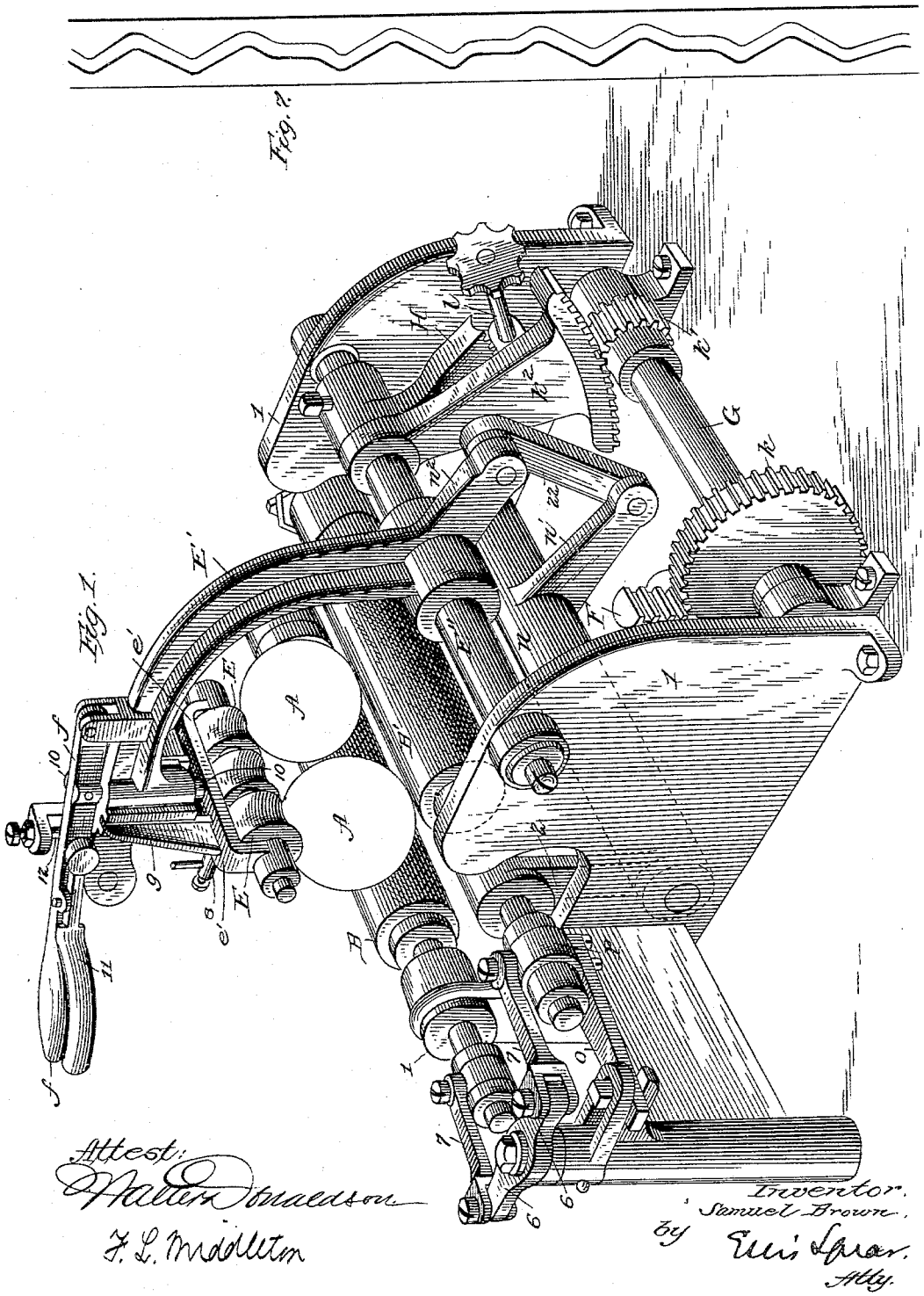

Attest:
Walter Brackson
F. L. Middleton

Inventor:
Samuel Brown,
by Ellis Spear,
Atty.

(No Model.) 6 Sheets—Sheet 2.

S. BROWN.

MACHINE FOR BALLING CORD OR YARN.

No. 389,054. Patented Sept. 4, 1888.

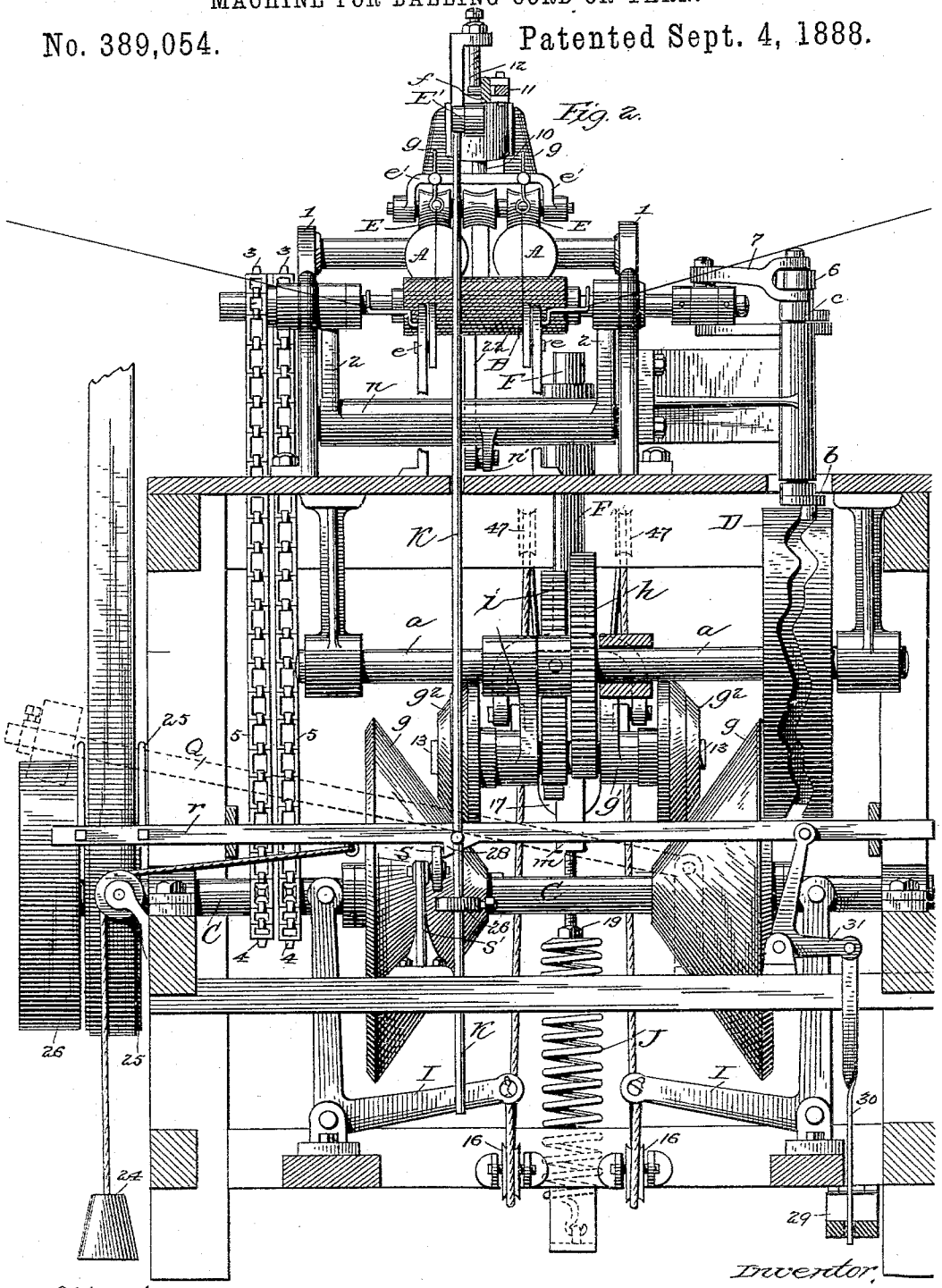

Attest:
Allen Donaldson
F. L. Middleton.

Inventor,
Samuel Brown,
by Ellis Spear,
Atty.

(No Model.) 6 Sheets—Sheet 3.

S. BROWN.

MACHINE FOR BALLING CORD OR YARN.

No. 389,054. Patented Sept. 4, 1888.

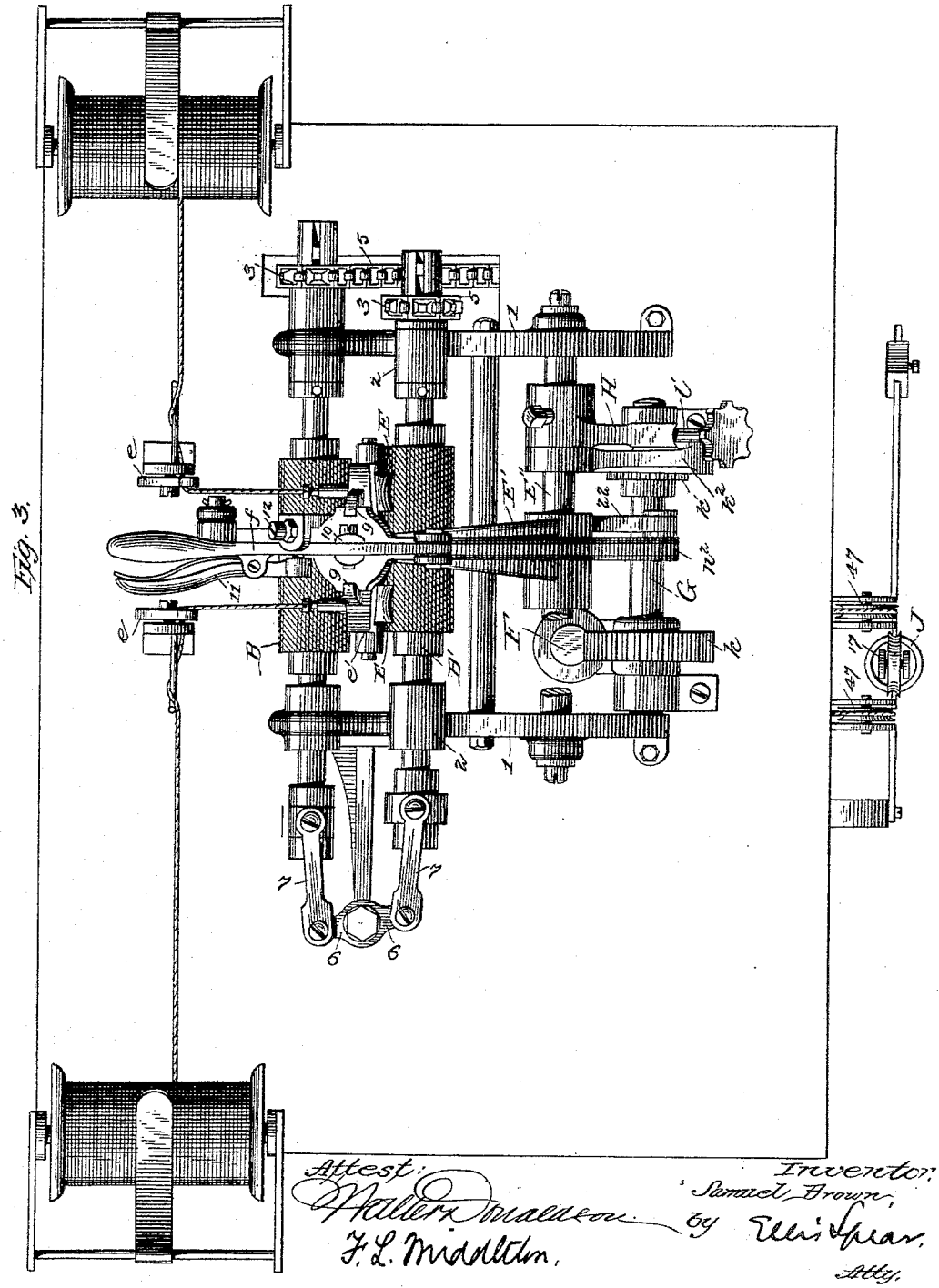

Attest:
Walter Macleod
F. L. Middleton.

Inventor:
Samuel Brown,
by Ellis Spear,
Atty.

(No Model.)

6 Sheets—Sheet 4.

S. BROWN.

MACHINE FOR BALLING CORD OR YARN.

No. 389,054. Patented Sept. 4, 1888.

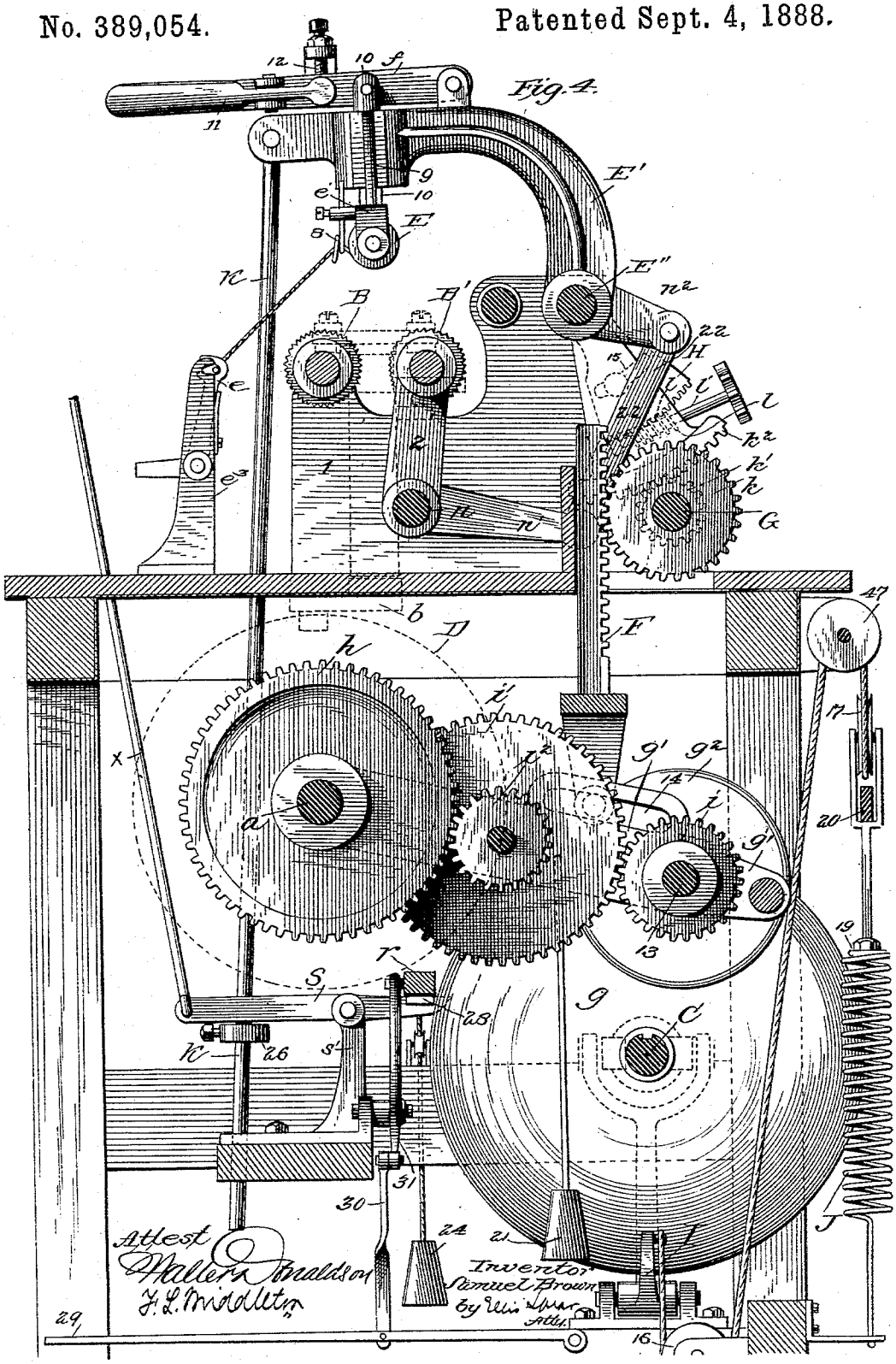

(No Model.)

6 Sheets—Sheet 5.

S. BROWN.

MACHINE FOR BALLING CORD OR YARN.

No. 389,054.

Patented Sept. 4, 1888.

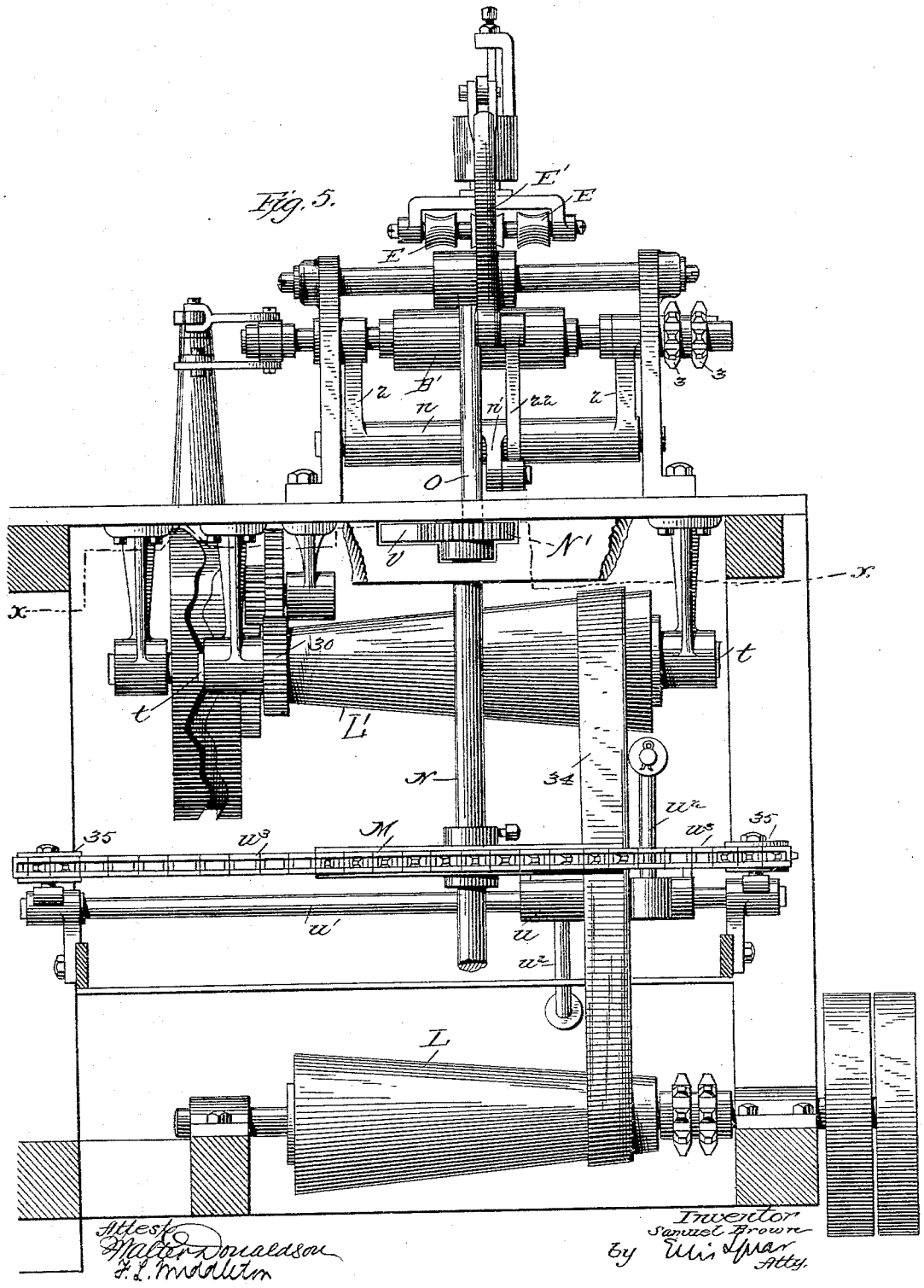

Attest
Walter Donaldson
F. L. Middleton

Inventor
Samuel Brown
by Wm. Spear
Atty.

(No Model.) 6 Sheets—Sheet 6.

S. BROWN.

MACHINE FOR BALLING CORD OR YARN.

No. 389,054. Patented Sept. 4, 1888.

Fig. 6.

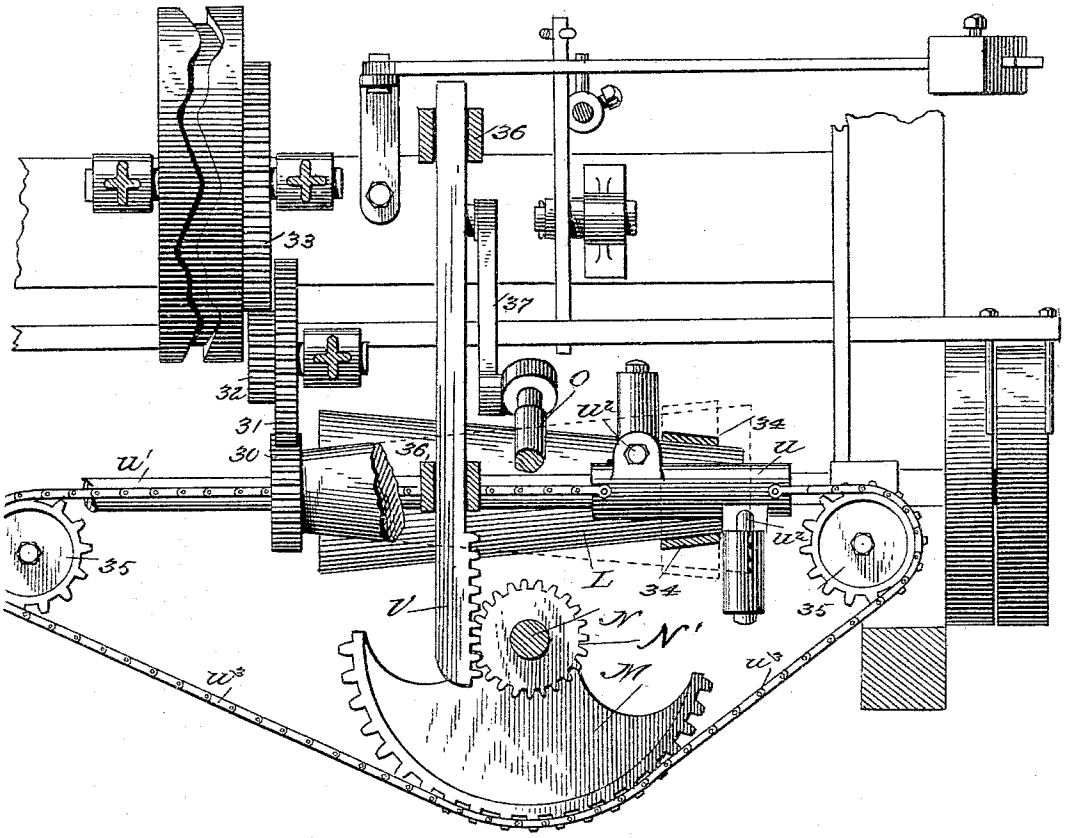

Attest,
Walter Duncan
F. L. Middleton.

Inventor:
Samuel Brown
by Ellis Spear,
Atty.

UNITED STATES PATENT OFFICE.

SAMUEL BROWN, OF SEAFORD HUNDRED, DELAWARE, ASSIGNOR TO A. J. REACH AND B. F. SHIBE, OF PHILADELPHIA, PENNSYLVANIA.

MACHINE FOR BALLING CORD OR YARN.

SPECIFICATION forming part of Letters Patent No. 389,054, dated September 4, 1888.

Application filed January 3, 1888. Serial No. 259,728. (No model.)

To all whom it may concern:

Be it known that I, SAMUEL BROWN, of Seaford Hundred, in the county of Sussex and State of Delaware, have invented a new and useful Improvement in Machines for Balling Cord or Yarn; and I do hereby declare that the following is a full, clear, and exact description of the same.

The object of the invention described hereinafter is the production of a machine for balling into solid and perfectly spherical form cord or yarn to be employed in the manufacture of base-balls, or for other purposes, such as for use in stores or the like. This machine is designed to carry out in a practical manner a certain method of winding the yarn, such as is described and claimed by me in an application filed June 14, 1888, Serial No. 277,127.

The invention consists, broadly, of holders for the balls having the necessary movements to secure the perfect formation of the ball; also in rollers for holding the ball having rotary and reciprocating movement, said rollers being combined with the other portion of the holder.

Further, the invention consists of a pressure-roller for holding the ball by its upper periphery and for applying tension to the yarn as it is fed under said roller to the ball.

Further, the invention consists in the employment of holding means having reciprocating movement, and in means whereby the same is interrupted at certain intervals. Further, of the supports having rotary and lateral movements and of means combined therewith for automatically changing said lateral movement as the ball increases in size; also, in means of adjustment whereby the initial speed of the lateral movement to which the ball is subjected may be determined and varied at will.

Further, my invention consists in automatic means whereby the machine is stopped when the ball reaches a predetermined size; also, in means whereby the size of the space within the holder is automatically and proportionately increased as the ball attains greater size; and, finally, my invention consists in certain means of adjustment and in the various devices and combinations thereof which aid me in embodying the invention in a practically-operating machine.

In the drawings, Figure 1 is a perspective view of a portion of the machine, illustrating the balls in position, the supports and holders for the same, and the devices in immediate connection therewith. Fig. 2 is a front view of the entire machine, a portion of the frame being shown in section. Fig. 3 is a plan view of the upper portion of the machine. Fig. 4 is a vertical section through the machine. Fig. 5 is a rear view showing a modification of the means for driving the operating-cam and for changing the speed thereof. Fig. 6 is a plan view of a section on line *x x* of Fig. 5. Fig. 7 is a view of the cam-groove which reciprocates the ball-holders.

In Fig. 1 the position of the balls during their manufacture is shown at A A. They are supported by rollers B B′, which are placed side by side with their axes parallel, and are arranged normally at a sufficient distance apart to receive and hold in the intervening space the cores of rubber or other material upon which the winding is done. The forward roller has its bearings in the side standards, 1 1, upon the table, and the roller B′ is journaled in the upper ends of movable arms 2 2, hereinafter referred to. Each roll is adapted to have longitudinal reciprocating movement, and in the operation of the machine they are given both a rotary and a reciprocating motion. They are both, also, provided with roughened surfaces, so that their movements will be given the balls. Over the rollers and in a plane with the space between them the holders E for the balls are positioned, their purpose being to hold the balls from lateral movement, but allow them to receive the full action of the supporting and winding rolls B B′, and at the same time to rotate freely under said action. These holders consist of small friction-wheels having concave peripheries carried in the forward end of a movable arm, E′, which is in turn mounted upon a shaft, E″, extending between the side standards. The yarn or material to be balled is drawn from any suitable supply, and is led through a guide and tension device, *e*, hereinafter described, and thence through a guide, 8, imme-

diately in front of the holding-roller, which directs it under the concave face of the same to the ball. The roller places the ball under pressure, and by reason of its concave face directs the yarn properly to the ball. By this pressure upon the ball, as the yarn passes beneath it, additional tension is placed upon the yarn, and it is laid on the ball according to the pressure exerted by the roller. The rotary movement to which the ball is subjected is continuous and regular; but the reciprocating movement of the rolls, which shifts or rotates the balls laterally and constantly changes the course of the yarn or cord, is intermittent or irregular, being interrupted by "pauses" at certain intervals. These pauses are slight, but in their periods of duration the yarn winds straight partially about the ball and in the same plane in which the yarn is fed. These periods in which the balls simply rotate are succeeded by the reciprocations, thus altering entirely the lateral position of the ball, (in respect to the point of feed,) which revolving continuously draws the yarn and causes it to be laid in a diagonal course until the recurrence of another pause, when the action of winding straight is repeated, the lateral shift or rotation of the ball being effected at each reciprocation. This peculiar combination of movements produces a perfectly round ball. The rotary movement is imparted to said rolls through the media of the sprocket-wheels 3 3 upon their ends, the sprockets 4 4 on the main driving-shaft C, and the intermediate chains, 5 5. A cam is employed to secure the desired reciprocating motion of the rollers (this being shown at D) on the supplemental shaft *a*. This cam operates, through an arm, *b*, a rock-shaft, *c*, which is provided with a slotted arm, c^5, extending to the rear. An arm, *o*, secured rigidly to the under side of the sleeve *p* in the shaft of the roller B′, extends to within the line of the slot in the arm c^5, and a projecting pin in the arm *o* enters said slot, as shown. The arm *o* is supported by a rest extending from the post surrounding the rock-shaft directly beneath the slotted arm. The movement of the rock-shaft is thus imparted to the roller B′ through the rigid arm *o*, and as the connection with the slotted arm c^5 is a movable one the movement rearward of the roller C is not only permitted by the connection, but the amount of reciprocation of the roller is increased as the stud on the arm *o* approaches the end of the slot, for a purpose hereinafter to be described. On the upper end of the rock-shaft a cross-bar is pivoted, forming projecting arms 6 6, extending upon either side of the center. Between these arms and sleeves on the roller-shafts are pivoted links 7 7, connecting the two, and through this connection the reciprocation of the roller B is effected and governed by the movement of the stud of the arm *o* in the slot of the arm c^5 through the roller B′. The cam consists of a wheel having a cam-groove in its periphery. The form of said groove is irregular, as in Fig. 7, to give the desired irregularities in the reciprocation of the rollers; but in general outline it is zigzag. At regular intervals one of the inclined portions is broken by a straight section of groove, and it is while the arm of the roller *b* is at this point that the pause in the reciprocation of the rolls takes place.

In practice the operator takes a ball of small size, preferably composed of rubber, as a core, and after placing the end of the yarn thereon he wraps the yarn several times about the core to keep it in place, and then he positions it properly within the holders and the rollers B B′. It will be obvious that the rate of rotation of the ball at this period of its manufacture must be the greatest, the speed being gradually reduced as the ball grows larger by reason of the continuous increase of surface acted upon by the rollers. In view of this fact it is necessary, also, correspondingly and automatically to change the speed of the cam for operating the rolls longitudinally, its greatest speed being attained when the ball is started and gradually lessened in proportion to the growth of the ball. It will be clear that the change in the course of the yarn, or, in other words, the lateral shift of the ball, must be proportionate to its rotary speed, as, should the ball remain in one position too long, the yarn would pile up in one course and either slip off or produce irregularities in the surface. The variable mechanism for accomplishing this automatic change in the speed of the cam is now to be described.

Upon the driving-shaft C of the machine are splined two beveled frictional wheels, *g g*, which are thus given rotary movement from the shaft, at the same time being permitted longitudinal movement thereon. Above these and arranged to bear upon them are two smaller beveled friction-wheels, g^2, which are carried on a shaft, 13, in the free and rear end of a movable frame, *g′*, pivotally supported upon the same shaft *a*. This shaft 13 also carries a pinion, *i*, which, through the intermediate gear and pinion, *i′ i″*, communicates the movement of the friction-wheels to a gear, *h*, which being mounted upon the cam-shaft drives said shaft and cam. The whole frame *g′*, with the driving mechanism carried thereby, is obviously adapted to be moved pivotally on the shaft *a* up and down, thus deriving more or less of the motion of the large friction-wheels, according as the position of said frame be at the periphery or near the center of rotation thereof.

The position of the frame with its friction-rollers g^2 is determined and the movement thereof is controlled by the position and movement of the movable arm E, which carries the holders. Thus when the action is just starting the arm E, with the ball-holders, being in its lowest position, the frame operated by the intermittent connection will be in its highest position, and consequently the maximum speed is drawn from the large friction-wheels, and is imparted to the cam to change with the great-

est rapidity the lateral shift of the ball, and consequently the course of the yarn wound thereon. As the ball increases, the arm moves upwardly, and through the proper connections the frame is moved toward the center of rotation, in this way gradually decreasing the speed of the cam and causing the lateral rotation or shift of the ball to be carried on with decreasing rapidity. The frame g' is supported by means of a rack-bar, F, which has at its lower end a yoke engaging on either side with a slot in the side of the said frame, as at 14, Fig. 4. The rack-bar extends upwardly through the table, and at its upper end engages with a gear, k, on the shaft G. Upon the other end of the shaft is a pinion, k', which derives its motion from a segmentel rack, k^2, operated by shaft E″, which is itself actuated by the movable arm E′. As shown in sectional view, upward movement of the arm E′, on account of the growth of the ball, causes the segmental rack to move toward the front of the machine, rotating the shaft and depressing the rack-bar with the frame and frictional driving-wheels.

I have provided an adjustment between the movable arm E′ and the frame g', so that the position of the latter relatively to that of the former may be changed, in order that the initial speed of the cam's rotation may be accurately adjusted for the purpose of securing exactly the required reciprocation of the rolls, and the consequent lateral shift or rotation of the balls. This adjustment is shown in Figs. 1, 3, 4, and consists in means of altering the position of the segmental rack k^2 on the shaft E″. The rack is loose upon the shaft, and at its side is fixed rigidly an arm, H, secured by a suitable set-screw. The outer end of said arm is formed on a curve struck from the center of the supporting-shaft, and is provided with teeth adapted to engage with a worm, l, on a shaft, l', mounted in suitable ears on the segmental rack-arm. The outer end of the shaft l' is provided with a thumb-wheel, by which it may be turned. The two arms (segmental rack and arm H) are held against lateral displacement by means of a headed bolt in the former passing through the slot 15 in the latter, Fig. 4. The worm and teeth on the respective arms serve to lock them rigidly together, so that the movement of the shaft E″ is imparted to the rack-arm, as would be the case were it fixed rigidly thereto. By turning the thumb-wheel either way the segmental rack will be moved, which motion will be imparted to the vertical rack-bar F through the intermediate pinion, shaft, and gear, thus effecting the desired change in the position of the small friction-wheels g', the arm H, shaft E″, movable arm E′, and holders remaining during this adjustment in stationary position. As before stated, the large friction-wheels on the main shaft have sliding as well as rotary movement thereon, and it is necessary to provide means for returning them to their normal position after they have been forced apart by the depression of the small friction-wheels, and also to give them a degree of resistance against the tendency of said wheels to force them outward sufficient to create strong frictional contact between them, and thus insure the full transmittal of the motion. For these purposes bell-crank levers I I are provided, pivoted to the frame, the vertical arms of which extend to a point just in rear of the driving frictional wheels, their ends being bifurcated to embrace the shaft and bear upon collars combined with said wheels. The horizontal arms extend toward each other, and are each connected with the ends of a band or rope which passes under pulleys 16 16, positioned on the frame at a point below the pivot-point of the bell-crank arms. From these pulleys the rope passes over the sheaves 47, located at the upper part of the machine-frame, and thence it extends downward in loop form and under a movable sheave, 17. This sheave is journaled in the forked upper part of a bar, m, which has a screw-threaded lower portion, to which is attached the upper part of a strong spiral spring, J. The spiral spring exerts its force upon the pulley 17 and looped rope, tending to pull them downward, and this force is transmitted through the rope to the bell-crank levers, exerting a downward pull upon the horizontal ends and tending to force their vertical arms inward. This arrangement opposes the outward movement of the large friction-wheels and causes them to bear hard upon the small wheels, making operative frictional contact and forcing them to their normal position for the formation of a new ball. The tension of the spring may be adjusted by means of the nut 19 to vary the resistance to which the movement of the large friction-wheels is subjected. Another desirable result is obtained by this arrangement in that the pressure upon the ball may be regulated at will by changing the tension of the spring.

It will be observed that the movement of the arm E′, with the ball-holders, will be more or less free in proportion to the ease with which the frame g', with the small friction-rolls, is depressed and the freedom of this movement, depending as it does upon the amount of resistance placed upon the large friction-wheels, it will be clear that by the adjustment of the spring the movement of the arm E′ will be correspondingly affected and the ball in its growth will be subjected to more or less pressure. As shown in Figs. 3 and 4, a pivoted bar, 20, may also be used in connection with the pulley 17, it being provided with an adjustable weight. This bar may act in connection with the spring. The pressure required to force the large bevel-gears apart varies with the position of the small wheels, and this variable pressure is secured by the spring. A weight, 21, may be employed to act upon the pivoted frame carrying the small friction-wheels and the train of gearing, its office being to insure contact between the said wheels and the driving-wheels.

As the ball being made grows in size, it is

necessary to enlarge the space within the holding means therefor. It has been seen how that a portion of the ball-holder which is carried by the arm E′ moves away from the other portions as the ball enlarges, but in addition to this one of the holding and supporting rolls is given a movement to enlarge the space in proportion to the growth of the ball, and also to furnish a proper support for the same. The rear roller, B′, is therefore mounted in movable arms 2 2, carried by the rock-shaft *n*, extending between the side standards. From about the center of said shaft an arm, *n′*, projects rearwardly and connects through a link, 22, with a projection, n^2, of the movable arm E′, so that the movement of the roller B′ to separate the parts of the holder is controlled by the movement of the arm E′, which in turn is positively operated by the growth of the ball. By this arrangement the separation of the ball-holder depends directly upon the enlargement of the ball itself, and the various portions of said holder must always bear the proper relation to each other, whatever the size of the ball. The arrangement of parts is such that the small friction-holders E will be directly over the center of the ball, and to secure this result the pivot-point of the movable arm is arranged to be in the same horizontal plane with the top of the core when the latter is positioned, and as the ball increases and its center changes the holders E, besides having an upward movement, have a slight movement to the rear to correspond with said changed center.

The ball holders E, of which I have shown three, are carried by a yoke, *e′*, Figs. 1 and 2, which has guides 9 9, adapted to slide vertically in an enlargement in the forward end of the movable arm E′. A post, 10, of the yoke *e′*, extends loosely through said enlargement, and is connected at its upper end with an operating-lever, *f*, pivoted to the arm E′ and projecting forward to within easy reach of the attendant. By this means the yoke, with the holder E, may be moved up and down independently of the arm E′, to enable the operator to remove completed balls and to place in position the cores or smaller balls to be operated upon. In order to hold the yoke and friction-wheels E in their lower position, a spring catch-lever, 11, is provided pivoted on the operating-lever *f*, its rear end having a stud adapted to pass through said lever and engage with the lower end of a stop-screw, 12, supported in a small bracket on the forward end of the movable arm. When the operating-lever is down, the spring catch-lever holds the friction-wheels in the required position, and thus gives the necessary pressure to the balls. The free connection between the movable roller B′ and the slotted arm of the rock-shaft allows the movement of the roller, and also constitutes a compensating device, so that the separating movement of the roller B′ will not cause undue irregularities in the reciprocating movement; but as the pin of the arm *o* is moved away from the center of the rock-shaft the stroke imparted thereto is greater, which thus increases the reciprocation of the rollers, which increase is necessary as the balls increase in size.

The machine is stopped automatically when the ball reaches a predetermined size, and I utilize the movement of the arm E′ for attaining this end. The belt-shipper rod *r*, Figs. 2 and 4, extends across the machine and has bearings in the frame. It is under tension applied by a suitable weight, 24, or spring, through the medium of a rope extending over a suitable pulley, and the tendency of this arrangement is to move said rod and ship the belt from the fast pulley 25 to the loose pulley 26. It is held in opposition to the action of the weight during the time it is desired that the machine shall operate by means of a catch-lever, S, pivoted to a standard, *s′*, supported on the frame. The rear end of this lever has vertical movement and bears upon the under side of the shipper-rod, and is thus adapted to engage with a lug, 28, thereon and to hold the rod, as shown in Fig. 2, so that the belt will be on the fast pulley. In order to release this catch-lever automatically upon the completion of the ball, I provide a rod, K, extending from the forward end of the movable arm E′ to the lower part of the machine frame, passing in close proximity to the forward end of the lever S. At a point on the rod K below the forward end of said lever I fix adjustably a collar, 26, and it will be obvious that when the rod K is lifted it draws up the collar 26 and raises the forward end of the lever S, thus releasing the rear end from the lug 28 and allowing the weight to exert its force and ship the belt. The size of the ball or the point at which the belt will be thrown is determined by the position of the collar 26 in relation to the catch-lever, and this may be varied at will. One side of the lug 28 is beveled to allow the rod to pass the catch-lever when retracted to start the machine, and for securing this action a treadle, 29, is provided within easy reach of the attendant's foot, and connection is made from this treadle to the rod by means of link 30 and bell-crank lever 31.

As shown in dotted lines, Fig, 2, a weighted lever, Q, may be utilized to give any desired weight to the movable arm E′ with the ball-holder E, the bar being pivoted at one side of the frame and having its free portion resting upon a pin secured to the vertical rod K.

I do not wish to limit myself to the precise form of holders for the balls shown, as the fundamental principle of my invention may be carried out by different styles, it being essential, however, that the ball be given a variety of movements, that it be held by its periphery, and that said holders have an expansive or separating action as the ball grows larger; nor do I desire to limit myself to the precise form of machine, as the various organizations of elements may be greatly varied.

In Figs. 5 and 6 is shown a modification of the devices employed for varying the speed of

the cam, in which the friction-wheels and other elements heretofore described are dispensed with. In this form of apparatus I employ two drums for transmitting the motion from the driving-shaft, said drums being beveled or cone-shaped and positioned parallel, but reversely. The one, L, is fixed to the driving-shaft and transmits the movement through a belt to the other drum, L′, fixed to a shaft, *t*, journaled in hangers from the under side of the machine. A train of gearing, 30 31 32 33, communicates the motion of this drum to the cam, as shown in Fig. 6. To effect the desired change in speed, the belt 34 is shifted laterally from one point on the drums to another, and this is done by the movement of the arm E′, as follows: The belt-shifter consists of a sleeve, *u*, adapted to slide on a supporting-bar, *u′*, and having studs u^2 projecting upward and downward from said sleeve and upon either side of the belt, each stud being provided with a small roller arranged to bear upon the edges of the belt. At opposite ends of the sliding sleeve the ends of a sprocket chain or belt, u^3, are secured, the chain passing around suitable sprocket-wheels, 35 35, upon either side of the machine-frame, and also about a segmental sprocket-wheel, M. This segmental sprocket is carried by an upright shaft, N, journaled in the frame, and having at its upper end a pinion, 72′, positioned directly under the machine-table. With this pinion a sliding rack-bar, *v*, engages, the latter being held in suitable guides, 36, on the under side of the table. The movable arm E is provided with a downwardly-extending arm, O, projecting through the machine-table and having connection at its lower end with the sliding rack by a link, 37.

It will be obvious that as the arm E moves upward by reason of the increasing size of the ball the sliding rack and pinion will be operated, and this movement will, through the vertical shaft and segmental rack, move the sprocket-chain, which will slide the sleeve, and thus shift the belt to decrease the speed.

In the drawings three holders are shown, and this is a convenient number for a machine; but this number is not material and may be changed.

The tension devices consist of an arm, *e*, under spring-tension and pivoted to a standard, e^3, both parts having notched upper ends, through which the yarn is lead. In order to stop the machine by hand, a rod, *x*, is provided, as in Fig. 4, connected with the shipper-rod catch S′ and extending up through the table at the front of the machine.

I claim as my invention—

1. In a machine for winding spherical balls, a pair of rollers, means for rotating said rollers in the same direction and for reciprocating them longitudinally, a freely-turning holder arranged to hold the ball between itself and the rollers, and a guide for the yarn or cord, whereby the said yarn or cord is fed at one point while the ball is rolled and turned back and forth, substantially as described.

2. In a machine for winding spherical balls, a pair of rollers, means for rotating said rollers in the same direction and for giving them a varied reciprocation longitudinally, a freely-turning holder arranged to hold the ball between itself and the rollers, whereby the yarn or cord is fed at one point while the ball is rolled and turned back and forth, substantially as described.

3. In a machine for forming cord or yarn into spherical balls, and in combination, a pair of rollers having rotary and reciprocating longitudinal movement, a freely-turning holder adapted to bear on the ball and hold it by frictional contact against the surface of said rollers, and a movable arm carrying said holder, whereby the holder may rise as the ball increases, with mechanism for operating the parts, all substantially as described.

4. In a machine for forming cord or yarn into spherical balls, and in combination, a pair of rollers, movable bearings for one of said rollers, and both of said rollers having longitudinal reciprocating movement, a freely-turning holder adapted to bear on the ball and hold it in frictional contact with the surface of said rolls, mechanism for operating the parts, and a guide for the yarn, all substantially as described.

5. In a machine for forming cord or yarn into spherical balls, and in combination, a pair of rollers, movable bearings for one of said rollers, means for giving both rotary and longitudinal reciprocating movement to said rollers, a freely-turning holder adapted to bear on the ball and hold it in frictional contact with the surface of said rollers, a movable arm carrying said holder, and connection between said movable arm and the said movable bearings, whereby the movement of the arm is communicated to the roller, substantially as described.

6. In a machine for forming cord or yarn into spherical balls, and in combination, a pair of rollers, means for giving them rotary movement, a freely-turning holder adapted to bear upon the ball and press it upon the surface of the said rollers, a movable arm carrying said holder, a variable driving mechanism for reciprocating the rollers longitudinally, and connections between the said movable arm and the said mechanism, whereby the variation of movement imparted by the driving mechanism is governed, substantially as described.

7. In a machine for forming cord or yarn into spherical balls, a pair of rollers, movable bearings for one of said rollers, means for imparting to said rollers rotary movement, a movable arm, a freely-turning holder mounted therein and adapted to hold the balls by frictional contact with the said rollers, connections between the movable arm and the movable roller, a variable driving mechanism for reciprocating the rollers longitudinally, and connections between the same and the rollers, and connections between the movable arm and

the said driving mechanism, substantially as described.

8. In combination, a pair of rollers, movable bearings for one of said rollers, mechanism for imparting to both a rotary motion, a rock-shaft, a cam for rocking it, a slotted arm on said shaft, connection between said arm and the movable roller, and link-connections between the rollers, substantially as described.

9. In combination with a pair of rollers, movable bearings for one of said rollers, a rocking shaft, a slotted arm, c^5, thereon, and a loose connection with the movable roller, arms and links connecting the rollers, suitable rotating shafts, and a cam having inclined and straight grooves for operating the rock-shaft, substantially as described.

10. In a machine for forming cord or yarn into spherical balls, a pair of rollers, means for giving said rollers longitudinal reciprocating and rotary movement, said rollers being formed with a roughened surface and combined with a freely-turning holder, and a guide for the yarn or cord, substantially as described.

11. In combination, the rollers, the rocking shaft having arms connected to the rollers by links, a cam-wheel operating the rock-shaft, the shaft *a*, carrying the cam-wheel, the frame carrying the train of gearing and the beveled friction-gear, the beveled friction-gear *g*, splined on the main shaft, and mechanism for holding them with a yielding pressure, all substantially as described.

12. In a machine for winding yarn into spherical balls, and in combination, the supports B B′ for the ball, the movable arm E′, provided with a roller to press upon the ball, the shaft *a*, the gear *h*, carried thereby, a frame pivoted thereon, the gears and friction-wheels carried thereby, the friction-wheels *g*, the rack F, attached to the frame, and intermediate connections between the rack and movable pressure-arm E′, whereby the speed is changed as the ball grows larger and moves the presser-arm E′, substantially as described.

13. In combination, the shaft *a*, the gear *h*, carried thereby, the frame pivoted thereon, the friction-wheels and gears carried by said frame, the friction-wheels *g*, the rack-bar F, the shaft G, the pinions *k k′* thereon, the shaft E″, the fixed and movable segments thereon, the adjusting-worm, and the movable arm E′, substantially as described.

14. In a machine for winding yarn into spherical balls, the combination of the supports for the ball, the movable arm E′, for pressing the ball, operated by direct action of said ball, a main driving-shaft, fixed and loose pulleys thereon, a shipper and mechanism for operating the shipper to shift the belt, a holding-catch for said shipper, and a rod for releasing said shipper from the catch, said rod being secured to the movable arm E′, to be operated by the movement thereof as the ball grows, substantially as described.

15. In combination, the supporting-rollers B B′, means for giving said rollers a rotary motion and a varying reciprocating movement, a movable holder, as E, adapted to bear upon the upper periphery of the ball, and connections between the holder E and the speed mechanism, and means for adjusting said connections, whereby the initial speed may be changed, substantially as described.

16. In a machine for winding balls, rollers B B′ and a holder, E, for supporting and imparting movement to the balls, and movable supports for one of said rollers and holder, whereby they have a separating movement to allow for the increase in the size of the ball, substantially as described.

17. In a machine for winding balls, a holder composed of supporting and holding rollers adapted to grasp the periphery of the ball, movable supports for the same, whereby they are adapted to have separating or expanding movement under the increasing size of the ball, variable driving mechanism for reciprocating the supporting-rolls, connections from the movable parts of the holder to the driving mechanism for controlling the same, and means for rotating the supporting-rollers, substantially as described.

18. In a machine for winding yarn into spherical balls, the combination of the supports B B′ for the ball, a roller having a concave periphery for pressing and retaining the ball in position, and a guide for directing the yarn beneath said concave roller, substantially as described.

In testimony whereof I have signed my name to this specification in the presence of two subscribing witnesses.

SAMUEL BROWN.

Witnesses:
FRANK C. STANEST,
HENRY B. FOULKE.